TRIMLINE SOLANO FREE STANDING - ELECTRIC

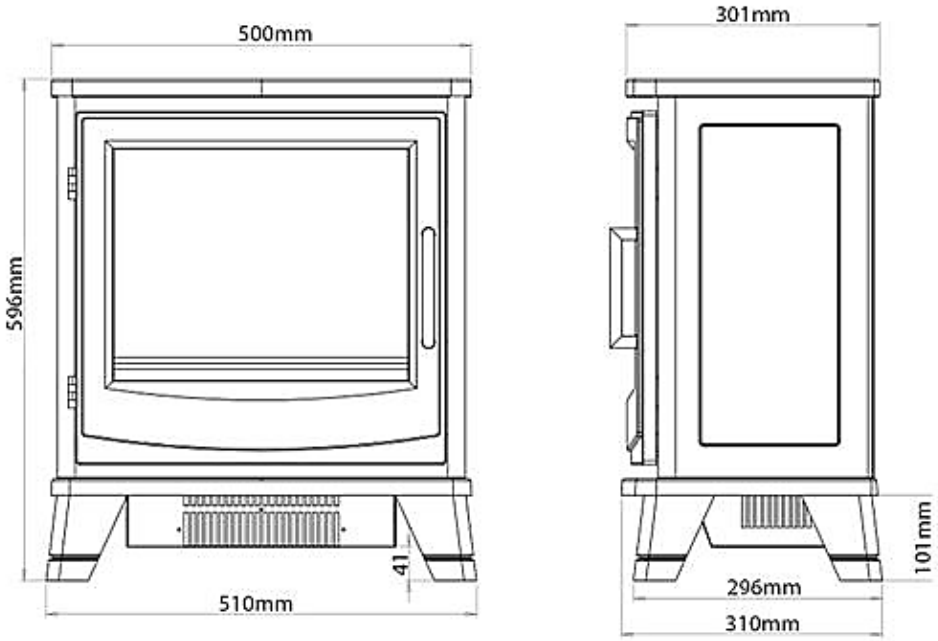

Trimline appliance	Horizon / Solano / Bassington
Heat output max. (kW)	2,0
Heat output min. (kW)	1,0
Flame effect performance (W)	25
Consumption max. (kW)	2,0
Weight (kg)	24,3
Features	
View on fire	Frontal
Type of flame technology	TriLight Technology
Heat settings	Heat 2x / Cold air
Optionals	
Ambient light kit performance max. (W)	9,6
Coppice log set	✓
Pedestal	✓
Decorative flue elbow	✓
WiFi app control	✓